Winstar Display Co., LTD
華凌光電股份有限公司

住址: 407 台中市中清路 163 號
No.163 Chung Ching RD.,
Taichune, Taiwan, R.O.C

WEB: http://www.winstar.com.tw
E-mail: winstar@winstar.com.tw
Tel:886-4-24262208 Fax：886-4-24262207

SPECIFICATION

CUSTOMER : _____

MODULE NO.: WF70HTIFGDBN0#

20130606

APPROVED BY: **(FOR CUSTOMER USE ONLY)**	**PCB VERSION:** **DATA:**

SALES BY	APPROVED BY	CHECKED BY	PREPARED BY
			万健
ISSUED DATE:	**2013-7-19**		

Winstar Display Co., LTD
華凌光電股份有限公司

MODLE NO：

RECORDS OF REVISION

DOC. FIRST ISSUE

VERSION	DATE	REVISED PAGE NO.	SUMMARY
0	2013.7.19		First issue

Contents

1.Module Classification Information

W	F	70	H	T	I	F	G	D	B	N	0	#
①	②	③	④	⑤	⑥	⑦	⑧	⑨	⑩	⑪	⑫	⑬

①	Brand：WINSTAR DISPLAY CORPORATION		
②	Display Type：H→Character Type, G→Graphic Type F→TFT Type		
③	Display Size：7.0 ” TFT		
④	Model serials no.		
⑤	Backlight Type：	F→CCFL, White	T→LED, White
⑥	LCD Polarize Type/ Temperature range/ Gray Scale Inversion Direction	I→Transmissive, W. T, 6:00 L→Transmissive, W.T,12:00	
⑦	A：TFT LCD B：TFT+FR+CONTROL BOARD C：TFT+FR+A/D BOARD D：TFT+FR+A/D BOARD+CONTROL BOARD E：TFT+FR+POWER BOARD F：TFT+CONTROL BOARD	G：TFT+FR H：TFT+D/V BOARD I：TFT+FR+D/V BOARD J：TFT+POWER BD	
⑧	Solution:		
	A: 128160	B:320234	C:320240
	D:480234	E:480272	F: 640480
	G: 800480		
	H:1024600	I:320480	J:240320
	K:800600	L:240400	M :1024768
⑨	D: Digital L：LVDS		
⑩	Interface： N：without control board A：8Bit B：16Bit		
⑪	TS： N：Without TS T：resistive touch panel C：capacitive touch panel		
⑫	Version		
⑬	Special Code	#:Fit in with ROHS directive regulations	

2.SUMMARY

This technical specification applies to 7.0’ color TFT-LCD panel. The 7.0’ color TFT-LCD panel is designed for camcorder, digital camera application and other electronic products which require high quality flat panel displays. This module follows RoHS.

3.General Specification

Item	Dimension	Unit
Dot Matrix	800 x RGB x 480(TFT)	dots
Module dimension	165.0(W) x 104.8(H) x 9.0(D)	mm
Active area	152.4 x 91.44	mm
Dot pitch	0.0635x0.1905	mm
LCD type	TFT, Negative, Transmissive	
View Direction	12 o’clock	
Gray Scale Inversion Direction	6 o’clock	
Backlight Type	LED,Normally White	

*Color tone slight changed by temperature and driving voltage.

4.Absolute Maximum Ratings

Item	Symbol	Min	Typ	Max	Unit
Operating Temperature	T_{OP}	-20	—	+70	℃
Storage Temperature	T_{ST}	-30	—	+80	℃

Note: Device is subject to be damaged permanently if stresses beyond those absolute maximum ratings listed above

1. Temp. ≦60^{0}C, 90% RH MAX. Temp. ＞ 60^{0}C , Absolute humidity shall be less than 90% RH at 60^{0}C

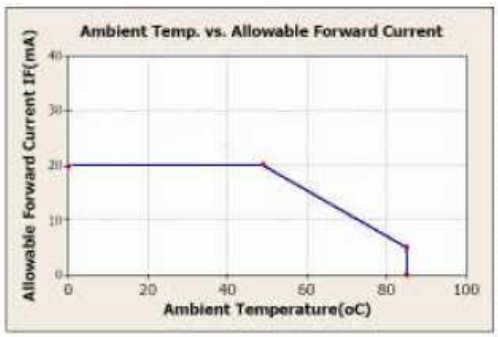

5.Electrical Characteristics

5.1. Operating conditions:

Item	Symbol	Condition	Min	Typ	Max	Unit
Supply Voltage For Logic	VDD	-	3.0	3.3	3.6	V

5.2 LED driving conditions

Parameter	Symbol	Min.	Typ.	Max.	Unit	Remark
LED current	-	-	160	-	mA	
Power Consumption	-	-	1552	1760	mW	
LED voltage	VBL+	8.4	-	11	V	Note 1
LED Life Time	-	-	50,000	-	Hr	Note 2,3,4

Note 1 : There are 1 Groups LED

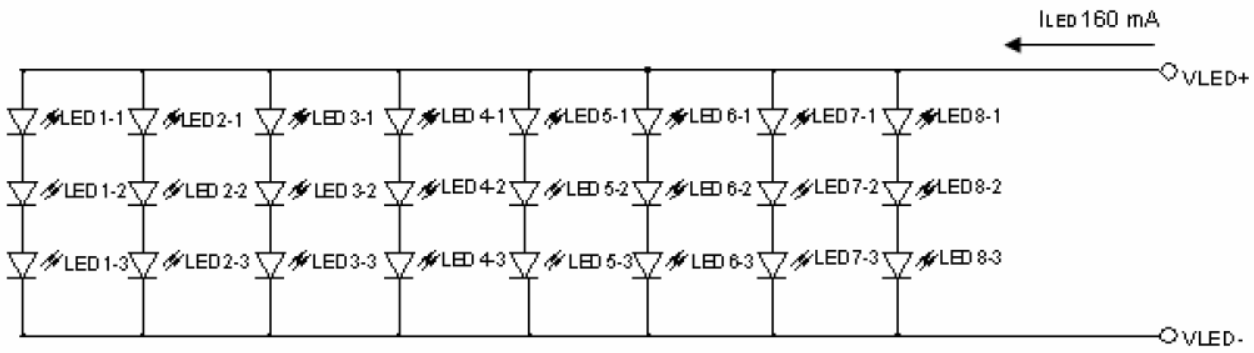

Note 2 : Ta = 25 ℃

Note 3 : Brightess to be decreased to 50% of the initial value

Note 4 : The single LED lamp case

6. DC Characteristics

Parameter	Symbol	Rating			Unit	Condition
		Min.	Typ.	Max.		
Low level input voltage	V_{IL}	0	-	0.3 VCC	V	
Hight level input voltage	V_{IH}	0.7 VCC	-	VCC	V	

7. Interface Timing

7.1.1 8080 Mode

The 8080 mode MCU interface consist of CS#, D/C#, RD#, WR#, D[23:0] and TE signals (Please refer to Table 6-1 for pin multiplexed with 6800 mode). This interface use WR# to define a write cycle and RD# for read cycle. If the WR# goes low when the CS# signal is low, the data or command will be latched into the system at the rising edge of WR#. Similarly, the read cycle will start when RD# goes low and end at the rising edge of RD#.

7.1.2 8080 Mode Write Cycle

Symbol	Parameter	Min	Typ	Max	Unit
t_{cyc}	Reference Clock Cycle Time	9	-	-	ns
t_{PWCSL}	Pulse width CS# low	1	-	-	t_{CYC}
t_{PWCSH}	Pulse width CS# high	1	-	-	t_{CYC}
t_{FDRD}	First Read Data Delay	5	-	-	t_{CYC}
t_{AS}	Address Setup Time	1	-	-	ns
t_{AH}	Address Hold Time	1	-	-	ns
t_{DSW}	Data Setup Time	4	-	-	ns
t_{DHW}	Data Hold Time	1	-	-	ns
t_{DSR}	Data Access Time	-	-	5	ns
t_{DHR}	Output Hold time	1	-	-	ns

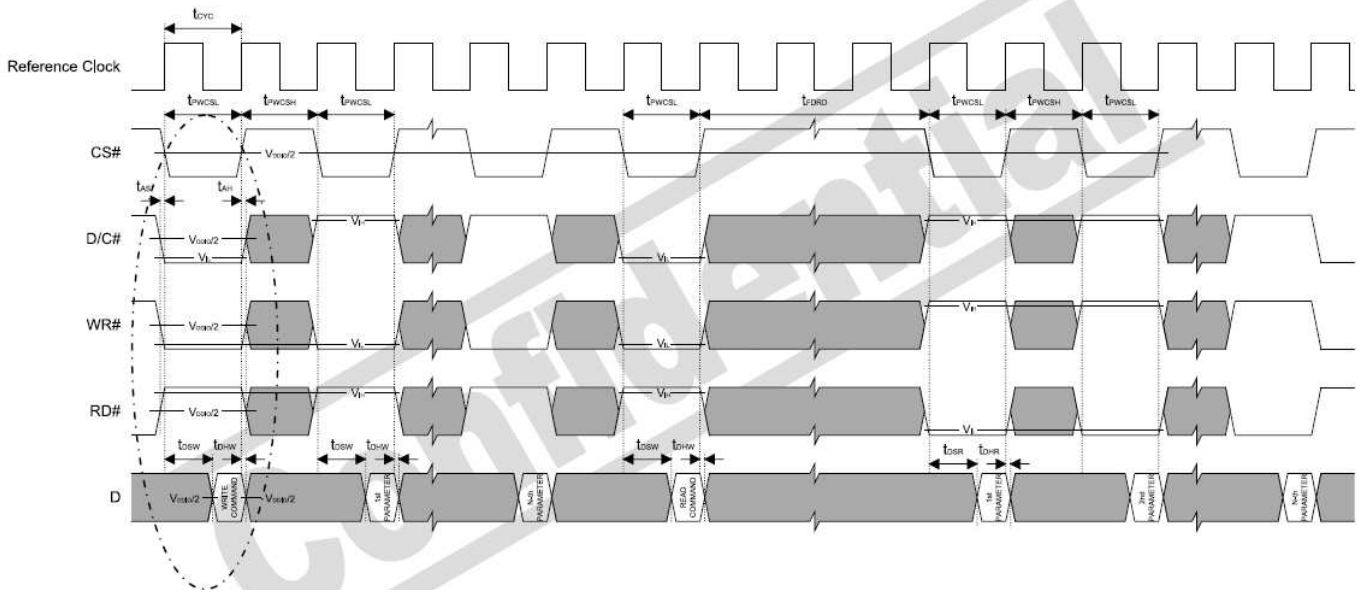

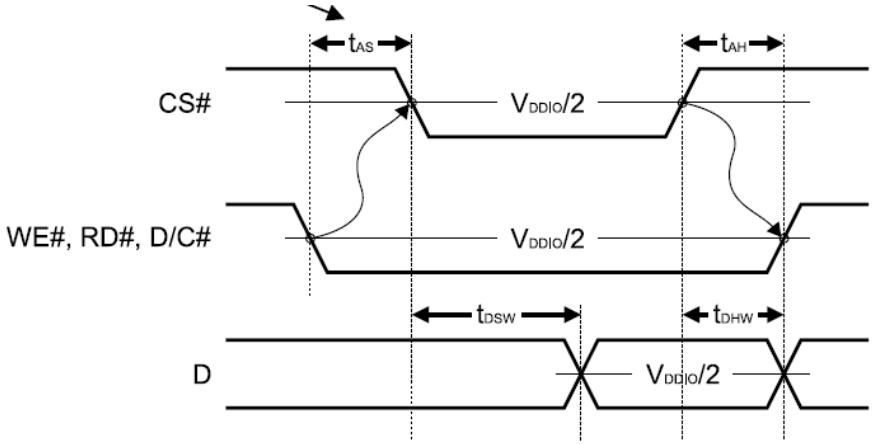

7.1.3 Pixel Data Format

Interface	Cycle	D[23]	D[22]	D[21]	D[20]	D[19]	D[18]	D[17]	D[16]	D[15]	D[14]	D[13]	D[12]	D[11]	D[10]	D[9]	D[8]	D[7]	D[6]	D[5]	D[4]	D[3]	D[2]	D[1]	D[0]
24 bits	1st	R7	R6	R5	R4	R3	R2	R1	R0	G7	G6	G5	G4	G3	G2	G1	G0	B7	B6	B5	B4	B3	B2	B1	B0
18 bits	1st							R5	R4	R3	R2	R1	R0	G5	G4	G3	G2	G1	G0	B5	B4	B3	B2	B1	B0
16 bits (565 format)	1st									R5	R4	R3	R2	R1	G5	G4	G3	G2	G1	G0	B5	B4	B3	B2	B1
16 bits	1st									R5	R4	R3	R2	R1	R0	X	X	G5	G4	G3	G2	G1	G0	X	X
	2nd									B5	B4	B3	B2	B1	B0	X	X	R5	R4	R3	R2	R1	R0	X	X
	3rd									G5	G4	G3	G2	G1	G0	X	X	B5	B4	B3	B2	B1	B0	X	X
9 bits	1st																R5	R4	R3	R2	R1	R0	G5	G4	G3
	2nd																G2	G1	G0	B5	B4	B3	B2	B1	B0
8 bits	1st																	R5	R4	R3	R2	R1	R0	X	X
	2nd																	G5	G4	G3	G2	G1	G0	X	X
	3rd																	B5	B4	B3	B2	B1	B0	X	X

X: Don't Care

8. Optical Characteristics

Item		Symbol	Condition.	Min	Typ.	Max.	Unit	Remark
Response time		Tr	θ =0° 、 Φ=0°	-	5	10	.ms	Note 3
		Tf		-	11	16	.ms	
Contrast ratio		CR	At optimized viewing angle	250	400	-	-	Note 4
Color Chromaticity	White	Wx	θ =0° 、 Φ=0	0.26	0.31	0.36	-	Note 2,5,6
		Wy		0.28	0.33	0.38	-	
Viewing angle	Hor.	ΘR	CR≧10	65	70	-	Deg.	Note 1
		ΘL		65	70	-		
	Ver.	ΦT		55	60	-		
		ΦB		55	60	-		
Brightness		-	-	350	460	-	cd/m^2	Center of display

Ta=25±2℃, I_L=20mA

Note 1: Definition of viewing angle range

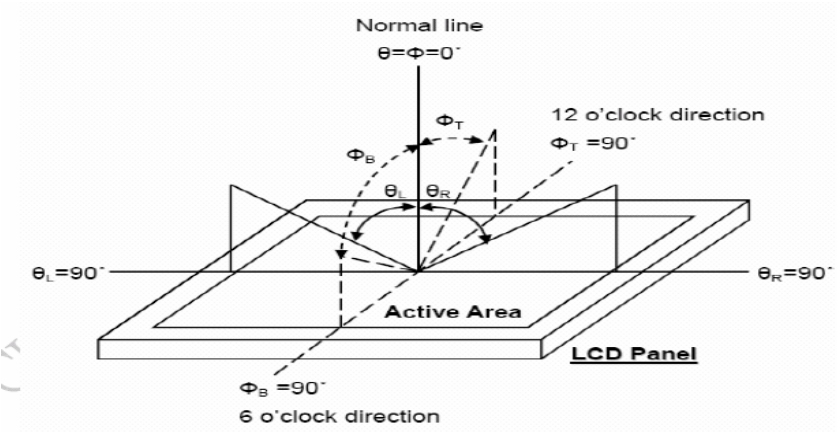

Fig. 8-1 Definition of viewing angle

Note 2: Test equipment setup:

After stabilizing and leaving the panel alone at a driven temperature for 10 minutes, the measurement should be executed. Measurement should be executed in a stable, windless, and dark room. Optical specifications are measured by Topcon BM-7 luminance meter 1.0°field of view at a distance of 50cm and normal direction.

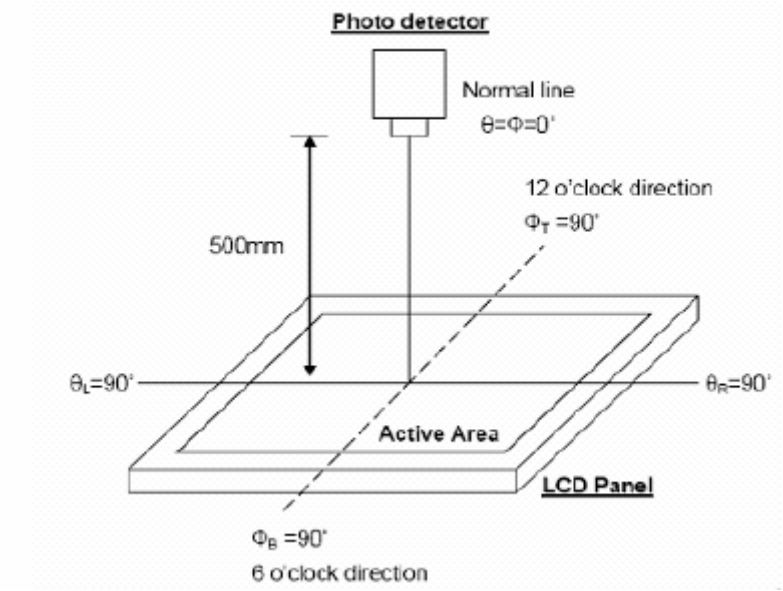

Fig. 8-2 Optical measurement system setup

Note 3: Definition of Response time:

Definition of response time：The response time is defined as the time interval between the 10% and 90% amplitudes.

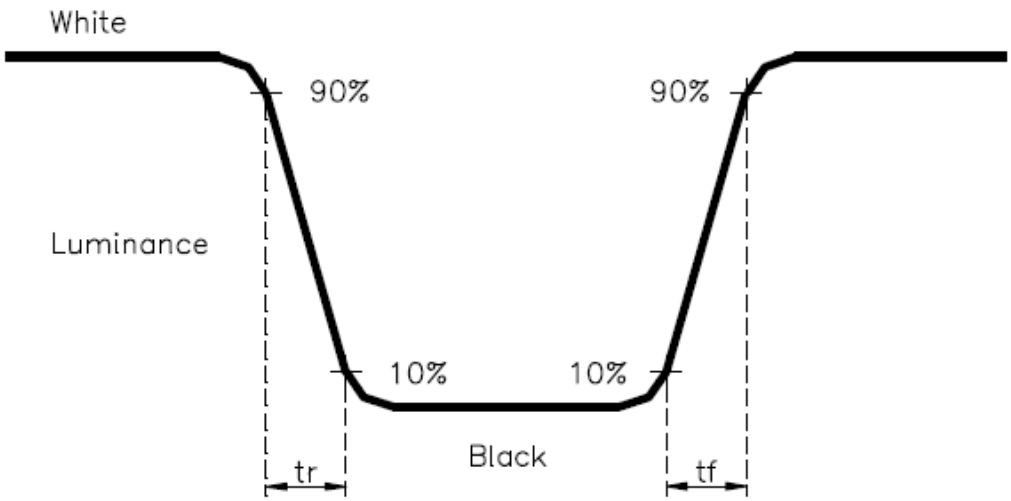

Note 4: Definition of contrast ratio:

The contrast ratio is defined as the following expression.

$$\text{Contrast ratio (CR)} = \frac{\text{Luminance measured when LCD on the “White” state}}{\text{Luminance measured when LCD on the “Black” state}}$$

Note 5: Definition of color chromaticity (CIE1931)

Color coordinates measured at center point of LCD.

Note 6: All input terminals LCD panel must be ground while measuring the center area of the panel.

9. Interface

9.1. LCM PIN Definition

Pin	Symbol	I/O	Function	Remark
1	VDD		Power Supply : +3.3V	
2	VDD		Power Supply : +3.3V	
3	DB0		Data bus	
4	DB1		Data bus	
5	DB2		Data bus	
6	DB3		Data bus	
7	DB4		Data bus	
8	DB5		Data bus	
9	DB6		Data bus	
10	DB7		Data bus	
11	DB8		Data bus	
12	DB9		Data bus	
13	DB10		Data bus	
14	DB11		Data bus	
15	DB12		Data bus	
16	DB13		Data bus	
17	DB14		Data bus	
18	DB15		Data bus	
19	CS		Chip select	
20	D/C		Display data/Command data	
21	RD		Read strobe signal	
22	WR		Write strobe signal	
23	NC		No connect	
24	RST		Hardware reset	
25	NC		No connect	
26	NC		No connect	
27	NC		No connect	
28	NC		No connect	
29	NC		No connect	
30	NC		No connect	
31	GND		Power Ground	
32	GND		Power Ground	

10. BLOCK DIAGRAM

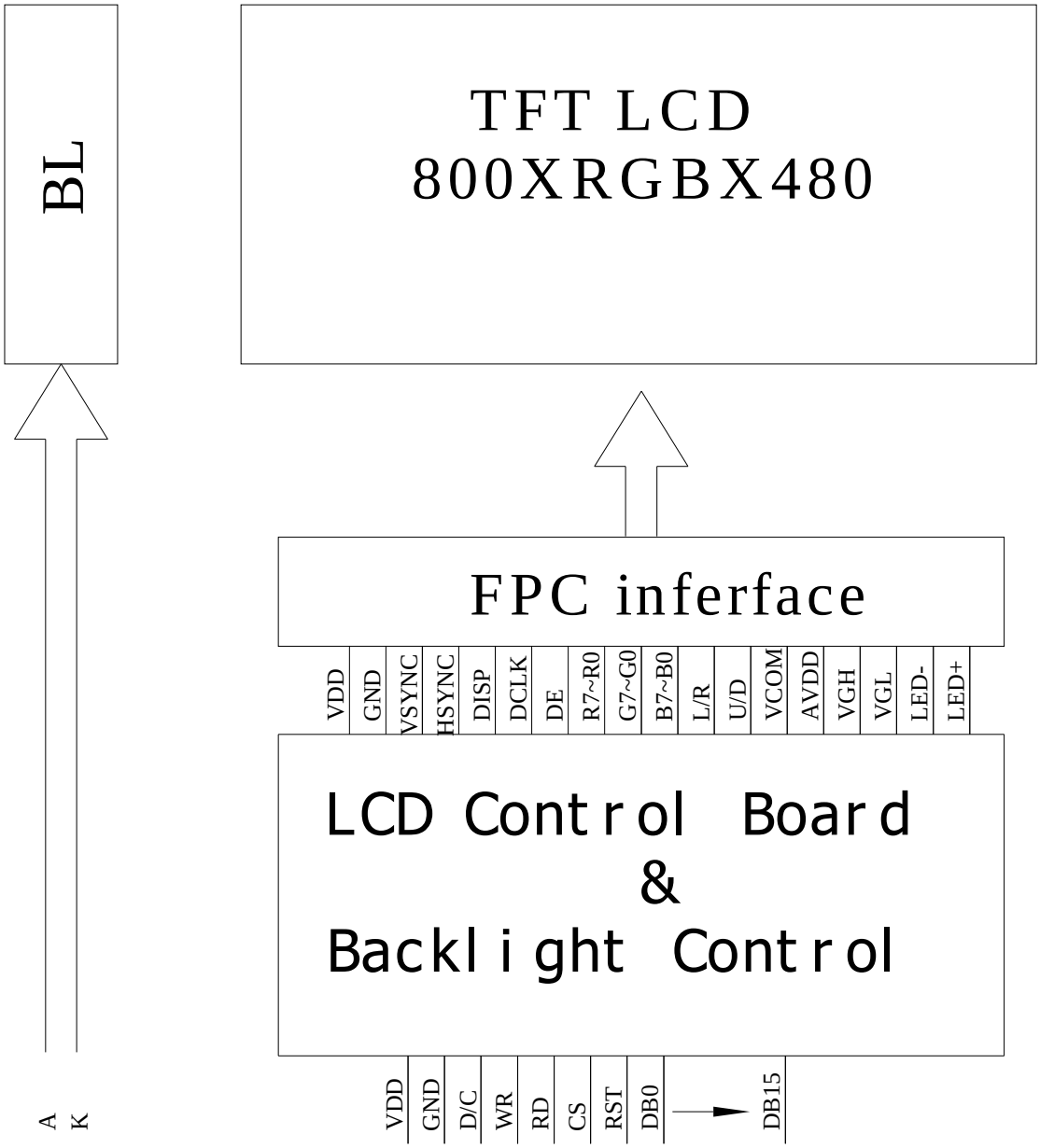

11.Reliability

Content of Reliability Test (Wide temperature, -20℃~70℃)

Environmental Test			
Test Item	**Content of Test**	**Test Condition**	**Note**
High Temperature storage	Endurance test applying the high storage temperature for a long time.	80℃ 200hrs	2
Low Temperature storage	Endurance test applying the high storage temperature for a long time.	-30℃ 200hrs	1,2
High Temperature Operation	Endurance test applying the electric stress (Voltage & Current) and the thermal stress to the element for a long time.	70℃ 200hrs	——
Low Temperature Operation	Endurance test applying the electric stress under low temperature for a long time.	-20℃ 200hrs	1
High Temperature/ Humidity Operation	The module should be allowed to stand at 60℃,90%RH max For 96hrs under no-load condition excluding the polarizer, Then taking it out and drying it at normal temperature.	60℃,90%RH 96hrs	1,2
Thermal shock resistance	The sample should be allowed stand the following 10 cycles of operation -20℃ 25℃ 70℃ 30min 5min 30min 1 cycle	-20℃/70℃ 10 cycles	——
Vibration test	Endurance test applying the vibration during transportation and using.	Total fixed amplitude : 15mm Vibration Frequency : 10~55Hz One cycle 60 seconds to 3 directions of X,Y,Z for Each 15 minutes	3
Static electricity test	Endurance test applying the electric stress to the terminal.	VS=800V,RS=1.5kΩ CS=100pF 1 time	——

Note1: No dew condensation to be observed.

Note2: The function test shall be conducted after 4 hours storage at the normal Temperature and humidity after remove from the test chamber.

Note3: Vibration test will be conducted to the product itself without putting it in a container.

12. Contour Drawing

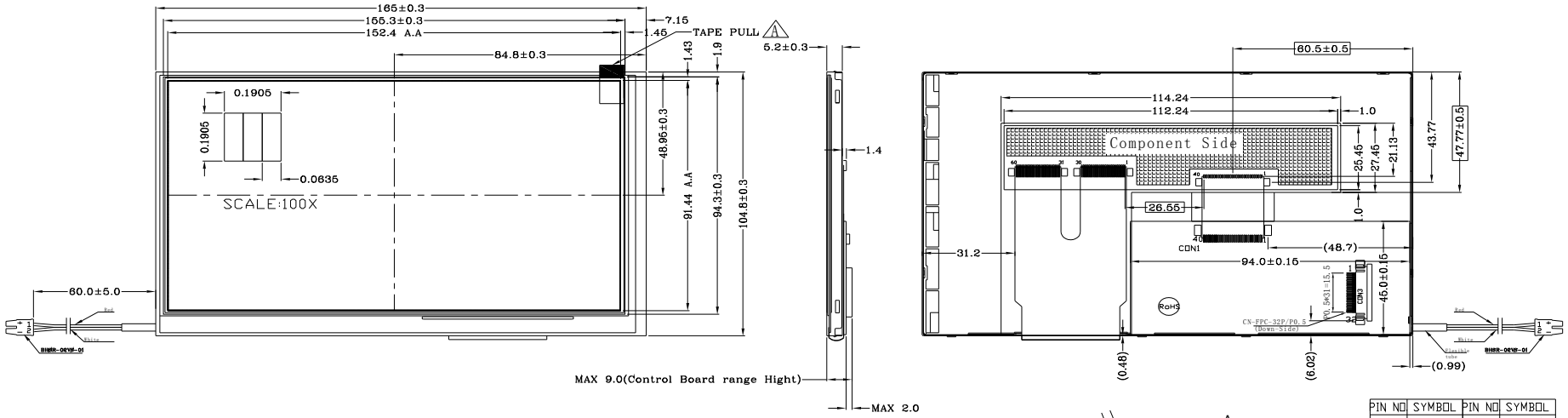

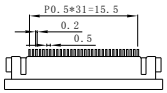

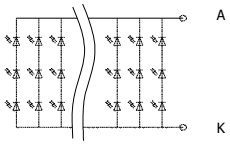

3*8 24LED

PIN NO	SYMBOL	PIN NO	SYMBOL
1	VDD	17	DB14
2	VDD	18	DB15
3	DB0	19	CS
4	DB1	20	D/C
5	DB2	21	RD
6	DB3	22	WR
7	DB4	23	NC
8	DB5	24	RST
9	DB6	25	NC
10	DB7	26	NC
11	DB8	27	NC
12	DB9	28	NC
13	DB10	29	NC
14	DB11	30	NC
15	DB12	31	GND
16	DB13	32	GND

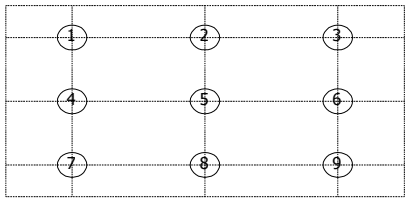

The non-specified tolerance of dimension is ±0.3mm.

13. Package specification

LCM Model	WF70HTIFGDBN0#
Drawing NO.	

LCM 包裝規格書
LCM Packaging Specifications

Approve	Check	Contact
DATE	初版	版次 Ver
13'7/19	13'7/19	0

1.包裝材料規格表（Packaging Material）:(per carton)

NO.	Item	Model	Dimensions	Quantity
1	成品（LCM）	WF70HTIFGDBN0#	165.0 x 104.8 x 9.0	60
2	TRAY 盤 (2)	PKCA1XXXXXXXXXXX0294	315 x 265	30
3	BP01 內盒(3)Product Box	PK3R1XXXXXXXXXXX0001	332 x 280 x 100	6
4	泡棉(4)Foam	-----	283 x 230 x 8	6
5	外紙箱(5)Carton	PK4Q1XXXXXXXXXXX0000	565 x 340 x 320	1
6				
7				
8				
9				

2.單箱數量規格表(Packaging Specifications and Quantity) :
(1)LCM quantity per box : no per tray 2 x no of tray 5 = 10
(2)Total LCM quantity in carton : quantity per box 10 x no of boxes 6 = 60

特 記 事 項 (REMARK)

1. Label Specifications :

MOOEL:
LOT NO :
QUANTITY:
CHECK:

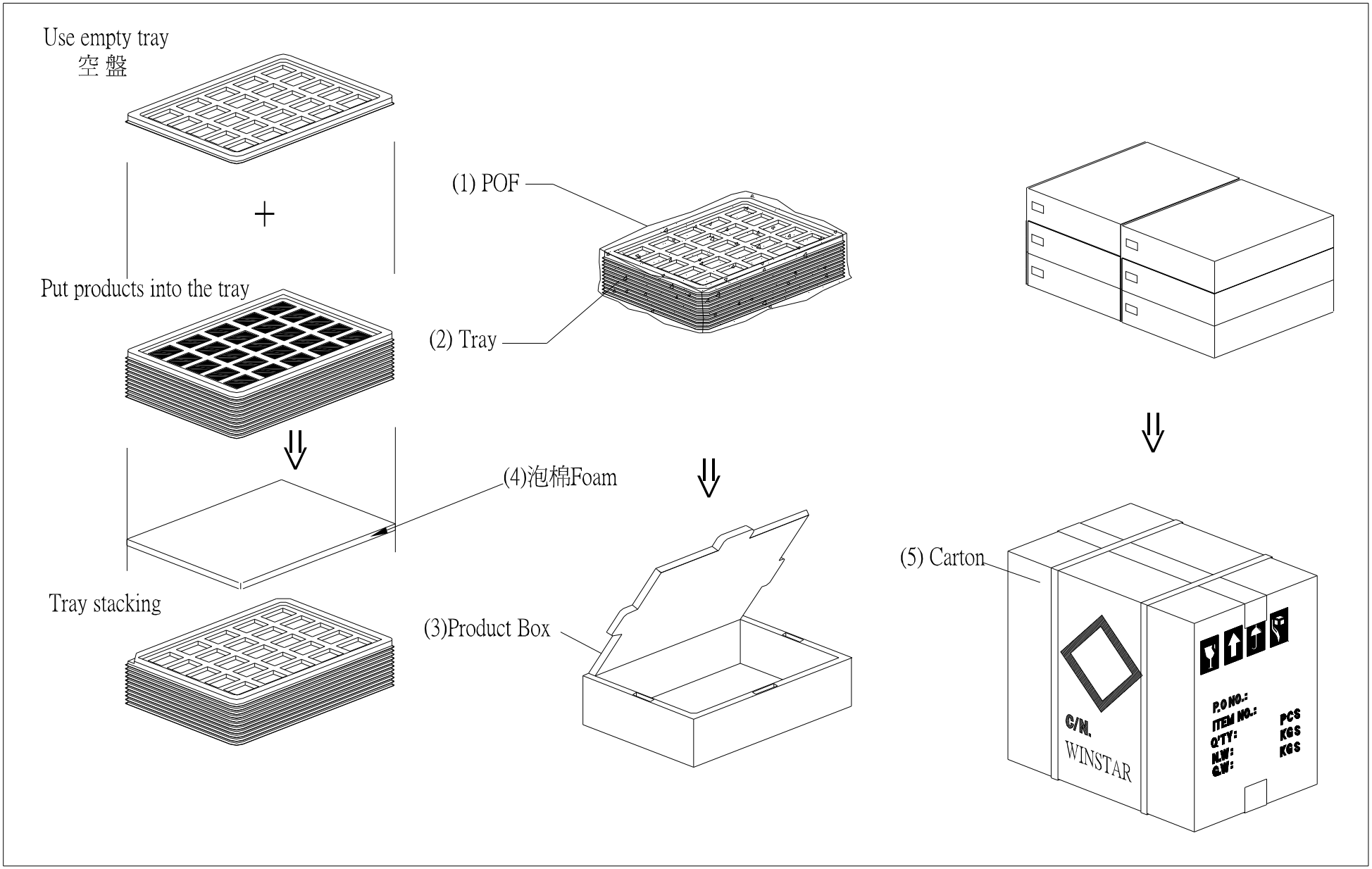
Use empty tray
空 盤
Put products into the tray
Tray stacking
(1) POF
(2) Tray
(4)泡棉Foam
(3)Product Box
(5) Carton
C/NO.
WINSTAR
P.O NO.:
ITEM NO.:
Q'TY: PCS
N.W: KGS
G.W: KGS

14. Initial Code For Reference

```
void Initial_code()
{

        Write_Command(0x01);
        Delay_ms(10);
        Write_Command(0xe0);
        Write_Parameter(0x01);
        Delay_ms(5);
        Write_Command(0xe0);
        Write_Parameter(0x03);
        Delay_ms(5);

        Write_Command(0xb0);
        Write_Parameter(0x08);
        Write_Parameter(0x80);
        Write_Parameter(0x03);
        Write_Parameter(0x1f);
        Write_Parameter(0x01);
        Write_Parameter(0xdf);
        Write_Parameter(0x00);

        Write_Command(0xf0);
        Write_Parameter(0x03);
        Write_Command(0x3a);
        Write_Parameter(0x50);

        Write_Command(0xe2);
        Write_Parameter(0x1d);
        Write_Parameter(0x02);
        Write_Parameter(0x54);

        Write_Command(0xe6);
        Write_Parameter(0x04);
        Write_Parameter(0x6f);
        Write_Parameter(0x47);

        Write_Command(0xb4);
        Write_Parameter(0x04);
        Write_Parameter(0x20);
        Write_Parameter(0x01);
        Write_Parameter(0x00);
        Write_Parameter(0x00);
        Write_Parameter(0x00);
        Write_Parameter(0x00);
        Write_Parameter(0x00);

        Write_Command(0xb6);
        Write_Parameter(0x02);
        Write_Parameter(0x0d);
        Write_Parameter(0x00);
        Write_Parameter(0x2d);
        Write_Parameter(0x00);
```

```
        Write_Parameter(0x00);
        Write_Parameter(0x00);

        Write_Command(0x2a);
        Write_Parameter(0x00);
        Write_Parameter(0x00);
        Write_Parameter(0x03);
        Write_Parameter(0x1f);

        Write_Command(0x2b);
        Write_Parameter(0x00);
        Write_Parameter(0x00);
        Write_Parameter(0x01);
        Write_Parameter(0xdf);

        Write_Command(0x29);
        Write_Command(0x2c);
}
```

winstar **LCM Sample Estimate Feedback Sheet**

Module Number：_____ **Page: 1**

1、Panel Specification：

1. Panel Type： ☐ Pass ☐ NG ,_____
2. View Direction： ☐ Pass ☐ NG ,_____
3. Numbers of Dots： ☐ Pass ☐ NG ,_____
4. View Area： ☐ Pass ☐ NG ,_____
5. Active Area： ☐ Pass ☐ NG ,_____
6. Operating Temperature： ☐ Pass ☐ NG ,_____
7. Storage Temperature： ☐ Pass ☐ NG ,_____
8. Others：_____

2、Mechanical Specification：

1. PCB Size： ☐ Pass ☐ NG ,_____
2. Frame Size： ☐ Pass ☐ NG ,_____
3. Material of Frame： ☐ Pass ☐ NG ,_____
4. Connector Position： ☐ Pass ☐ NG ,_____
5. Fix Hole Position： ☐ Pass ☐ NG ,_____
6. Backlight Position： ☐ Pass ☐ NG ,_____
7. Thickness of PCB： ☐ Pass ☐ NG ,_____
8. Height of Frame to PCB： ☐ Pass ☐ NG ,_____
9. Height of Module： ☐ Pass ☐ NG ,_____
10. Others： ☐ Pass ☐ NG ,_____

3、Relative Hole Size：

1. Pitch of Connector： ☐ Pass ☐ NG ,_____
2. Hole size of Connector： ☐ Pass ☐ NG ,_____
3. Mounting Hole size： ☐ Pass ☐ NG ,_____
4. Mounting Hole Type： ☐ Pass ☐ NG ,_____
5. Others： ☐ Pass ☐ NG ,_____

4、Backlight Specification：

1. B/L Type： ☐ Pass ☐ NG ,_____
2. B/L Color： ☐ Pass ☐ NG ,_____
3. B/L Driving Voltage (Reference for LED Type)： ☐ Pass ☐ NG ,_____
4. B/L Driving Current： ☐ Pass ☐ NG ,_____
5. Brightness of B/L： ☐ Pass ☐ NG ,_____
6. B/L Solder Method： ☐ Pass ☐ NG ,_____
7. Others： ☐ Pass ☐ NG ,_____

>> **Go to page 2** <<

5、Electronic Characteristics of Module：

1. Input Voltage： ☐ Pass ☐ NG ,_____
2. Supply Current： ☐ Pass ☐ NG ,_____
3. Driving Voltage for LCD： ☐ Pass ☐ NG ,_____
4. Contrast for LCD： ☐ Pass ☐ NG ,_____
5. B/L Driving Method： ☐ Pass ☐ NG ,_____
6. Negative Voltage Output： ☐ Pass ☐ NG ,_____
7. Interface Function： ☐ Pass ☐ NG ,_____
8. LCD Uniformity： ☐ Pass ☐ NG ,_____
9. ESD test： ☐ Pass ☐ NG ,_____
10. Others： ☐ Pass ☐ NG ,_____

6、Summary：

Sales signature：_____

Customer Signature：_____ **Date：**_____/_____/_____